SYM	REVISION	DATE	BY
A	ECO# 1352-003	8/31/04	ALR
B	ECO# 1352-004	9/16/04	ALR
C	ECO# 1352-012	11/24/04	ALR
D	ECO# 1352-022	1/25/05	ALR

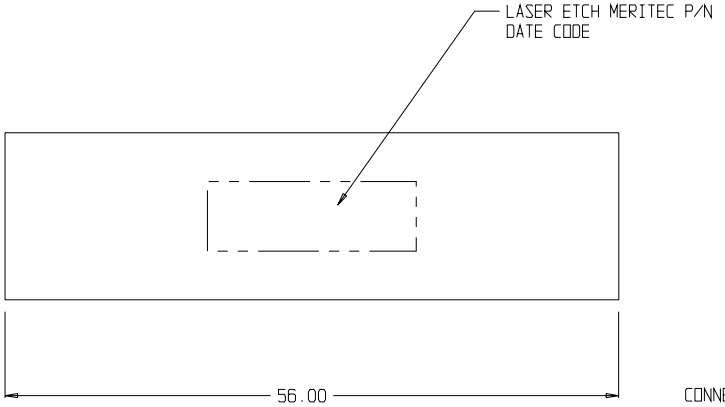

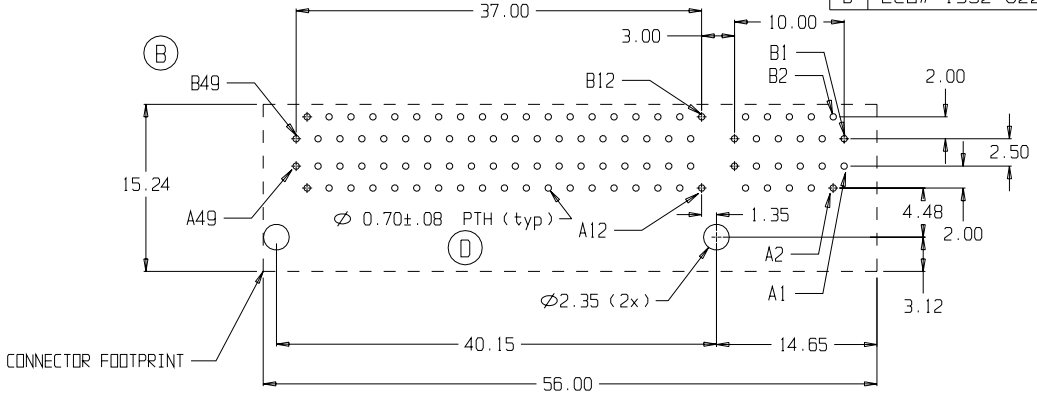

RECOMMENDED PCB LAYOUT
CONNECTOR SIDE SHOWN

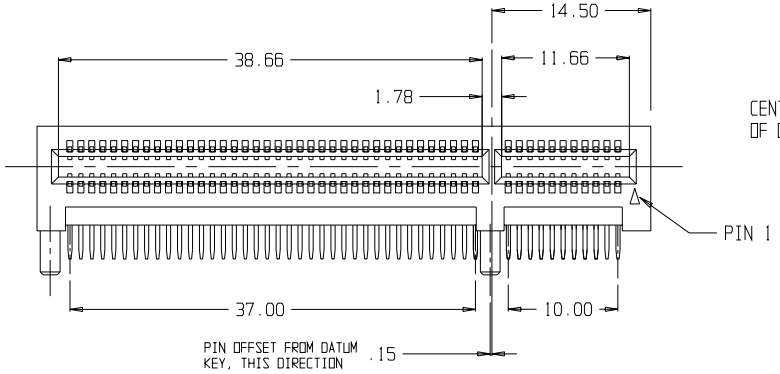

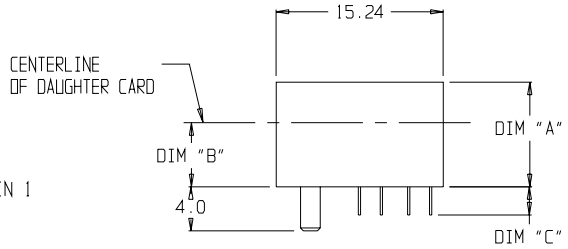

MATERIALS:

CONNECTOR HOUSING -- GLASS FILLED LIQUID CRYSTAL POLYMER, BLACK, UL 94V-0

CONTACTS -- COPPER ALLOY

CONTACT FINISH:

.0000050" MIN. GOLD IN CONTACT AREA, LEAD-FREE PLATING ON CONTACT TAILS, OVER .000050" MIN. NICKEL ENTIRE CONTACT.

DIM "A"	DIM "B"	DIM "C"	MERITEC PART NO.
9.4 (.37)	5.84 (.230)	2.54 (.100)	983171-098-2MPF
9.4 (.37)	5.84 (.230)	3.18 (.125)	983172-098-2MPF
9.4 (.37)	5.84 (.230)	3.56 (.140)	983173-098-2MPF
14.7 (.58)	11.18 (.440)	2.54 (.100)	98317G-098-2MPF
14.7 (.58)	11.18 (.440)	3.18 (.125)	98317H-098-2MPF
14.7 (.58)	11.18 (.440)	3.56 (.140)	98317J-098-2MPF
20.3 (.80)	16.69 (.657)	2.54 (.100)	98317A-098-2MPF
20.3 (.80)	16.69 (.657)	3.18 (.125)	98317B-098-2MPF
20.3 (.80)	16.69 (.657)	3.56 (.140)	98317C-098-2MPF

ALL DIMENSIONS IN MILLIMETERS UNLESS OTHERWISE NOTED

UNLESS OTHERWISE NOTED DIMENSIONS ARE IN MM
.XX ± [ ] .XXX ± [ ] .XXXX ± [ ]
ANGLES ± [ ] FINISH:
DRAWN: ALROATH DATE 04/10/04
CHECKED: DATE
RELEASED: DATE
NEXT ASS'Y DWG.

MERITEC™
A DIVISION OF ASSOCIATED ENTERPRISES
CONFIDENTIAL PROPRIETARY INFORMATION

TITLE RT. ANGLE PCI EXPRESS™ X8 DAUGHTER CARD COMP. UP

PROJECT No 1352 | SCALE NONE | SHEET 1 OF 1
DWG No 1352-00301 | REV D